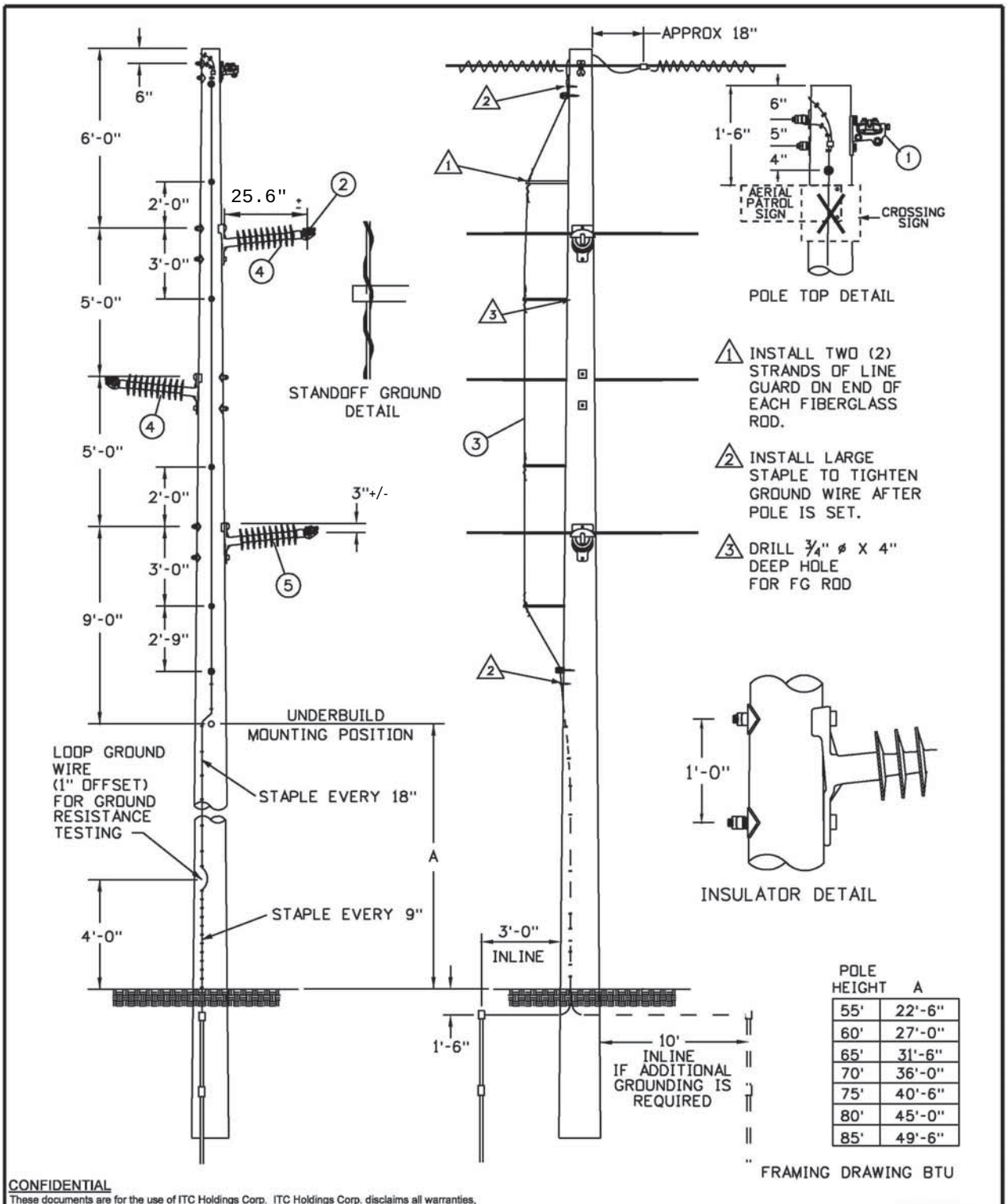

POLE HEIGHT	A
55'	22'-6"
60'	27'-0"
65'	31'-6"
70'	36'-0"
75'	40'-6"
80'	45'-0"
85'	49'-6"

FRAMING DRAWING BTU

CONFIDENTIAL
These documents are for the use of ITC Holdings Corp. ITC Holdings Corp. disclaims all warranties, both expressed and implied. Use by anyone other than ITC Holdings Corp. is at their own risk.

ITC Midwest

NO.	DATE	REVISION	BY	CHK'D	APV'D
3	10-17-08	CHANGE TO ITC BORDER	RAH		
2	11-10-05	GROUNDING CHANGES	RT		
1	02-13-04	STANDARD CHANGES	SDL		DD
0	09-01-99	ORIGINAL ISSUE	SJK		

69KV TANGENT W/ HPI & STANDOFF GND

Scale: NONE

DWG. NO. 69TGSP

RECEIVED
August 30, 2012

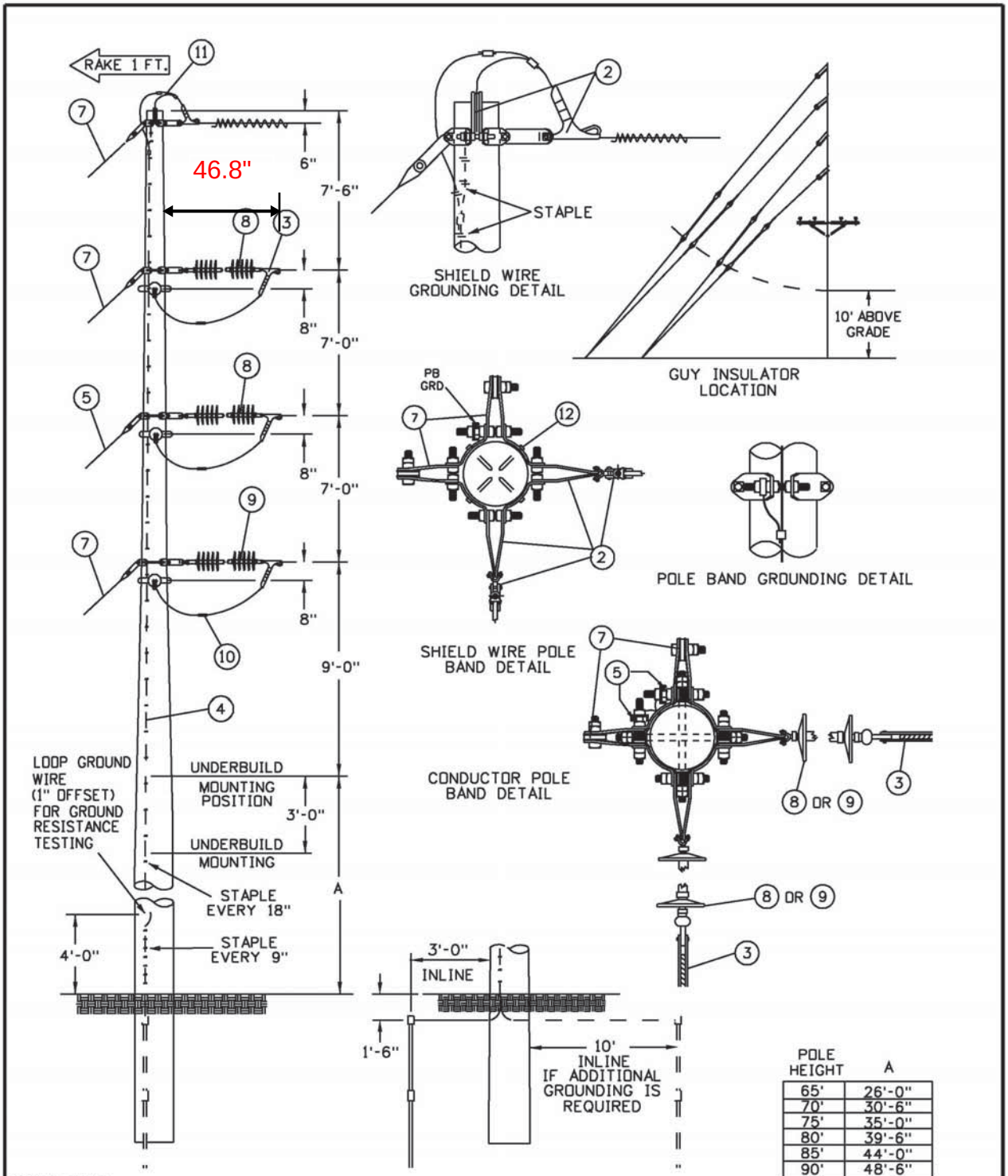

POLE HEIGHT	A
65'	26'-0"
70'	30'-6"
75'	35'-0"
80'	39'-6"
85'	44'-0"
90'	48'-6"

FRAMING CODE BD

CONFIDENTIAL
These documents are for the use of ITC Holdings Corp. ITC Holdings Corp. disclaims all warranties, both expressed and implied. Use by anyone other than ITC Holdings Corp. is at their own risk.

ITC Midwest

NO.	DATE	REVISION	BY	CHK'D	APV'D
3	10-17-08	CHANGE TO ITC BORDER	RAH		
2	11-10-05	GROUNDING CHANGES	RT		
1	02-13-04	STANDARD CHANGES	SDL		DD
0	09-01-99	ORIGINAL ISSUE	SJK		

69KV 2-WAY DEADEND
W/ 25K LB INS. & POLEBANDS

Scale: NONE | DWG. NO. 69D2V3

RECEIVED
August 30, 2012

E-20994
(Amendment No. 10)

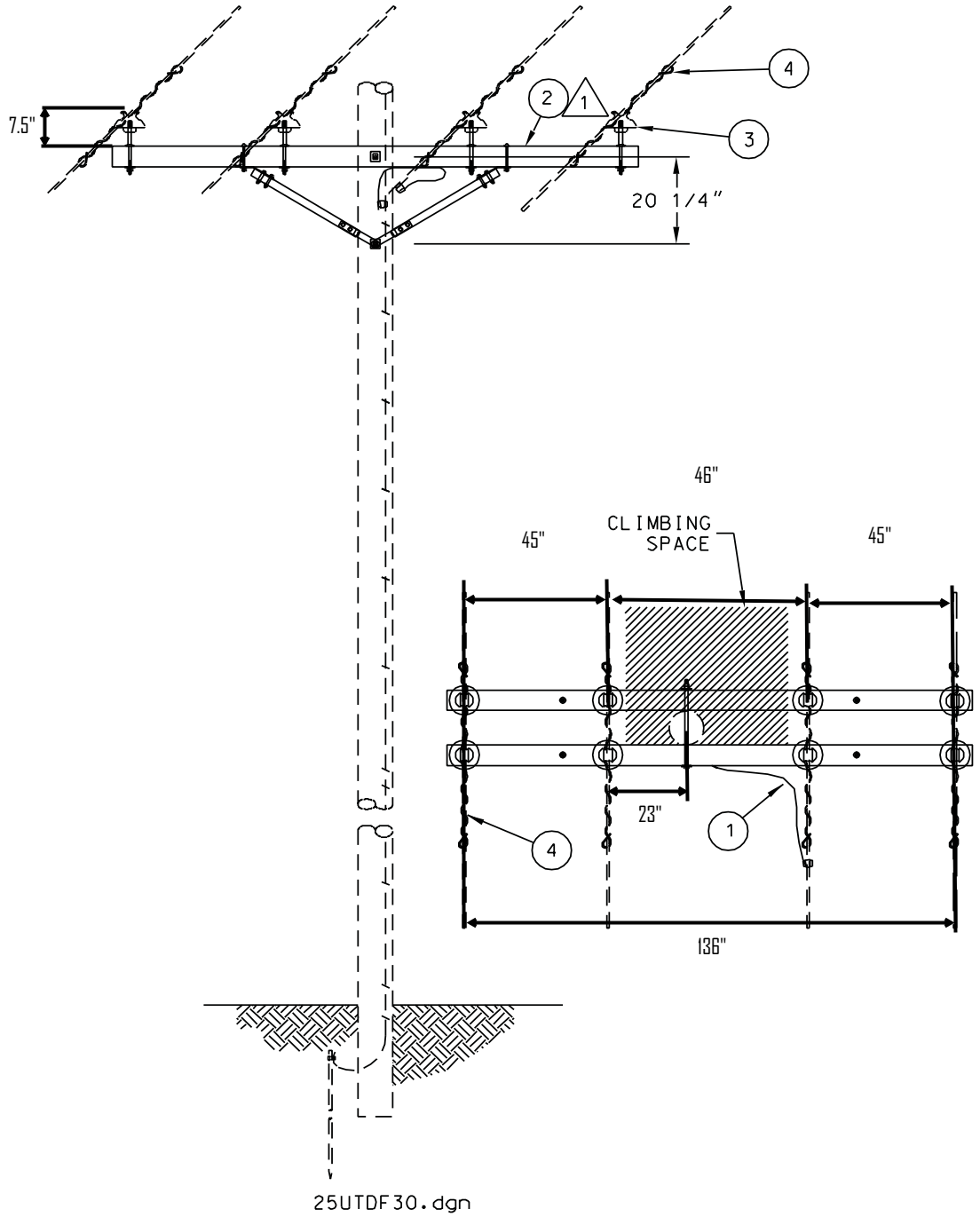

RECEIVED
August 30, 2012

E-20994
(Amendment No. 10)

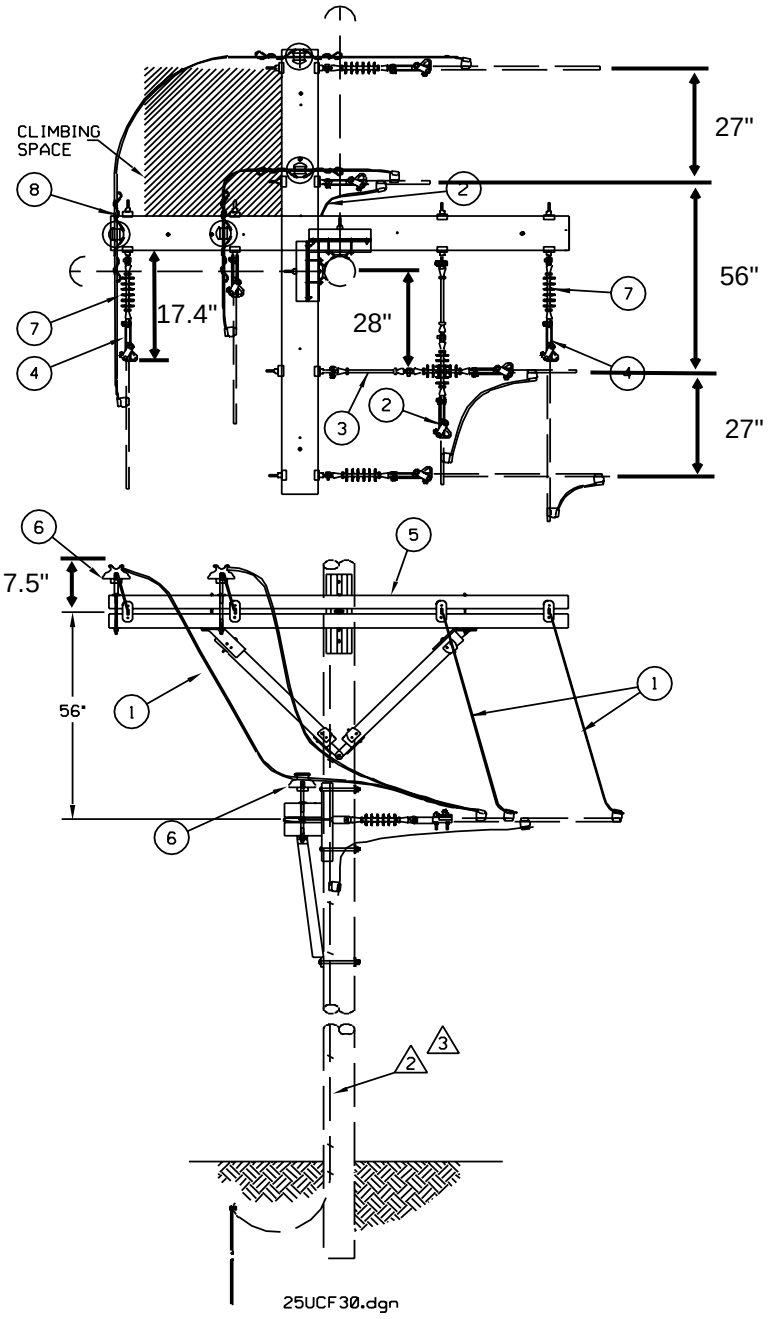

RECEIVED
August 30, 2012

E-20994
(Amendment No. 10)