EXHIBIT C
Engineering Specifications for an Overhead Transmission Line
Segment 1 of 1

PRINCIPAL CIRCUIT

1. Name of Petitioner: ITC Midwest, LLC

2. Name or Circuit Number of Line: Center Point - Midway 69kV

3. Length of Segment: 5.03 miles
4. Segment is located in the following sections, townships, and ranges: Sections 8 and 7 in T85N, R7W and Sections 12, 11 and 10 in T85N, R8W

5. Segment will be rebuilt in 2013.
6. Segment will be rebuilt and maintained in accordance with the Iowa Electrical Safety Code and the 2007 Edition of the National Electrical Safety Code.

7. Maximum *Capable of Operating* Voltage: 72.5 kVAC Nominal Operating Voltage: 69 kVAC

8. Construction Grade: B Typical Span: 275 ft. Maximum Span: 300 ft.

Vertical Overhead Clearance Requirement* for the Phase Conductors

	Surface	*Basic Clearance*	+	*Voltage Adder*	+	*Additional Adders*	=	*Clearance*
9.	*Open Ground*	18.5 ft.	+	0.7 ft.	+	ft.	=	19.2 ft.
10.	*Roads*	18.5 ft.	+	0.7 ft.	+	ft.	=	19.2 ft.
11.	*(no RR crossings)*	ft.	+	ft.	+	ft.	=	ft.
12.	*(no water surfaces)*	ft.	+	ft.	+	ft.	=	ft.

* The Iowa Electrical Safety Code and the applicable edition of the NESC should both be referenced to determine the conditions at which the above clearances apply.

Phase Conductors:
13. Code Word: T2 Penguin Size: 2 4/0 Stranding: 2-6/1 Material: ACSR

Shield Wire(s):
14. Size: 3/8" Stranding: 7 Material: EHS
15. Frequency of Shield Wire Grounding (if applicable): At each structure

Typical Insulators

16.		*Post Type*	*Suspension Type*	
			Tan. / Ang. Single Piece Unit	*Strain Single Piece Unit*
17.	*Manufacturer*	Ohio Brass	Ohio Brass	Ohio Brass
18.	*Catalog number*	80S0690600 or Equivalent	S025036S2010 or Equivalent	S025036S2010 or Equivalent
19.	*Dry Flashover*	230 kV	385 kV	385 kV
20.	*Wet Flashover*	180 kV	365 kV	365 kV
21.	*Impulse Flashover, +*	360 kV	635 kV	635 kV
22.	*Impulse Flashover, –*	415 kV	620 kV	620 kV

RECEIVED
February 13, 2013

E-20994
(Amendment No. 15)

Typical Structures:

23. Structures Typically are: Wood Poles
24. Typical Height After Installation: 56.5-74.5 ft.

Typical Wood Pole:

25. Species: Pacific Coast Douglas Fir Treatment: Penta Class: 1-H2 Length: 65-85 ft.

Steel Structures:

26. Steel Pole or Tower Material: N/A

27. H-Frame Structure Bracing Type: N/A Spacing Between H-Frame Poles: N/A ft.

28. Support Arm Type: N/A Material: N/A Dimensions: N/A

29. Guys are: Insulated Guy Markers are: Orange

SECOND TRANSMISSION CIRCUIT (if applicable)

30. Name of Owner: N/A
31. Name or Circuit Number of Line: _____
32. If Franchised Separately, Docket Number of Order Granting Franchise: _____

33. Maximum *Capable of Operating* Voltage: _____ Nominal Operating Voltage: _____

Vertical Overhead Clearance Requirement* for the Phase Conductors

	Surface	*Basic Clearance*	+	*Voltage Adder*	+	*Additional Adders*	=	*Clearance*
34.	*Open Ground*	ft.	+	ft.	+	ft.	=	ft.
35.	*Roads*	ft.	+	ft.	+	ft.	=	ft.
36.	*Railroads*	ft.	+	ft.	+	ft.	=	ft.
37.	*Water*	ft.	+	ft.	+	ft.	=	ft.

* The Iowa Electrical Safety Code and the applicable edition of the NESC should both be referenced to determine the conditions at which the above clearances apply.

Phase Conductors:

35. Code Word: _____ Size: _____ Stranding: _____ Material: _____

Typical Insulators

		Post Type	*Suspension Type*	
			Tan. / Ang. *(select)*	*Strain* *(select)*
37.	*Manufacturer*			
38.	*Catalog number*			
39.	*Dry Flashover*	kV	kV	kV
40.	*Wet Flashover*	kV	kV	kV
41.	*Impulse Flashover, +*	kV	kV	kV
42.	*Impulse Flashover, –*	kV	kV	kV

43. Support Arm Type: _____ Material: _____ Dimensions: _____

RECEIVED
February 13, 2013
E-20994
(Amendment No. 15)

DISTRIBUTION UNDERBUILD (if applicable)

44. Name of Owner: Interstate Power and Light Comany

45. Nominal Voltage: 7.2 KV

46. Number of Distribution Phase Conductors: 1

47. Neutral is Multi-grounded Multi-Grounding Frequency: At each structure, except dead ends

Vertical Overhead Clearance Requirement* for the Phase Conductors

	Surface	*Basic Clearance*	+	*Additional Adders*	=	*Clearance*
48.	*Open Ground*	18.5 ft.	+	ft.	=	18.5 ft.
49.	*Roads*	18.5 ft.	+	ft.	=	18.5 ft.
50.	*(no RR crossings)*	ft.	+	ft.	=	ft.
51.	*(no water surfaces)*	ft.	+	ft.	=	ft.

* The Iowa Electrical Safety Code and the applicable edition of the NESC should both be referenced to determine the conditions at which the above clearances apply.

Vertical Overhead Clearance Requirement* for the Neutral Conductor (if applicable)

	Surface	*Basic Clearance*	+	*Additional Adders*	=	*Clearance*
52.	*Open Ground*	15.5 ft.	+	ft.	=	15.5 ft.
53.	*Roads*	15.5 ft.	+	ft.	=	15.5 ft.
54.	*(no RR crossings)*	ft.	+	ft.	=	ft.
55.	*(no water surfaces)*	ft.	+	ft.	=	ft.

* The Iowa Electrical Safety Code and the applicable edition of the NESC should both be referenced to determine the conditions at which the above clearances apply.

56. Support Arm Type: Crossarm Material: Wood Dimensions: 8' x 4.625" x 3.625"

TYPICAL STRUCTURE DRAWING

57. A drawing of a typical tangent structure, as described in the instructions, has been attached.

ADDITIONAL DRAWINGS REQUIRED FOR NEW CONSTRUCTION

58. Angle structures will be used in this segment of line. A drawing of a typical angle structure, as described in the instructions, has been attached.

59. Dead-end structures will be used in this segment of line. A drawing of a typical dead-end structure, as described in the instructions, has been attached.

60. There are no grain bins along this segment of line. Drawings showing the clearance envelope for each grain bin in relation to the proposed line are not required.

RECEIVED
February 13, 2013

E-20994
(Amendment No. 15)

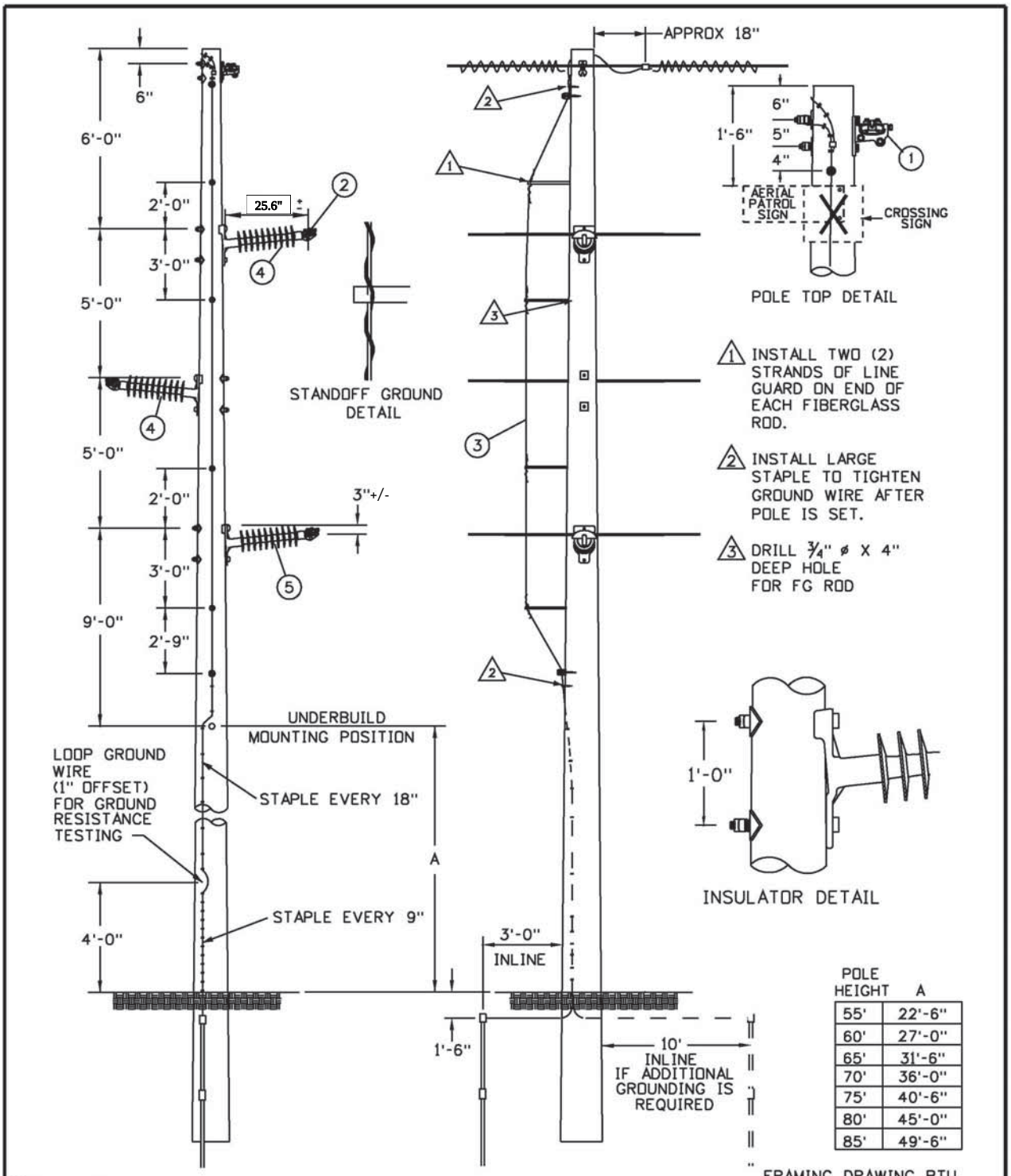

POLE HEIGHT	A
55'	22'-6"
60'	27'-0"
65'	31'-6"
70'	36'-0"
75'	40'-6"
80'	45'-0"
85'	49'-6"

FRAMING DRAWING BTU

CONFIDENTIAL
These documents are for the use of ITC Holdings Corp. ITC Holdings Corp. disclaims all warranties, both expressed and implied. Use by anyone other than ITC Holdings Corp. is at their own risk.

ITC Midwest

NO.	DATE	REVISION	BY	CHK'D	APV'D
3	10-17-08	CHANGE TO ITC BORDER	RAH		
2	11-10-05	GROUNDING CHANGES	RT		
1	02-13-04	STANDARD CHANGES	SDL		DD
0	09-01-99	ORIGINAL ISSUE	SJK		

69KV TANGENT W/ HPI & STANDOFF GND

Scale: NONE

DWG. NO. 69TGSP

RECEIVED
February 13, 2013

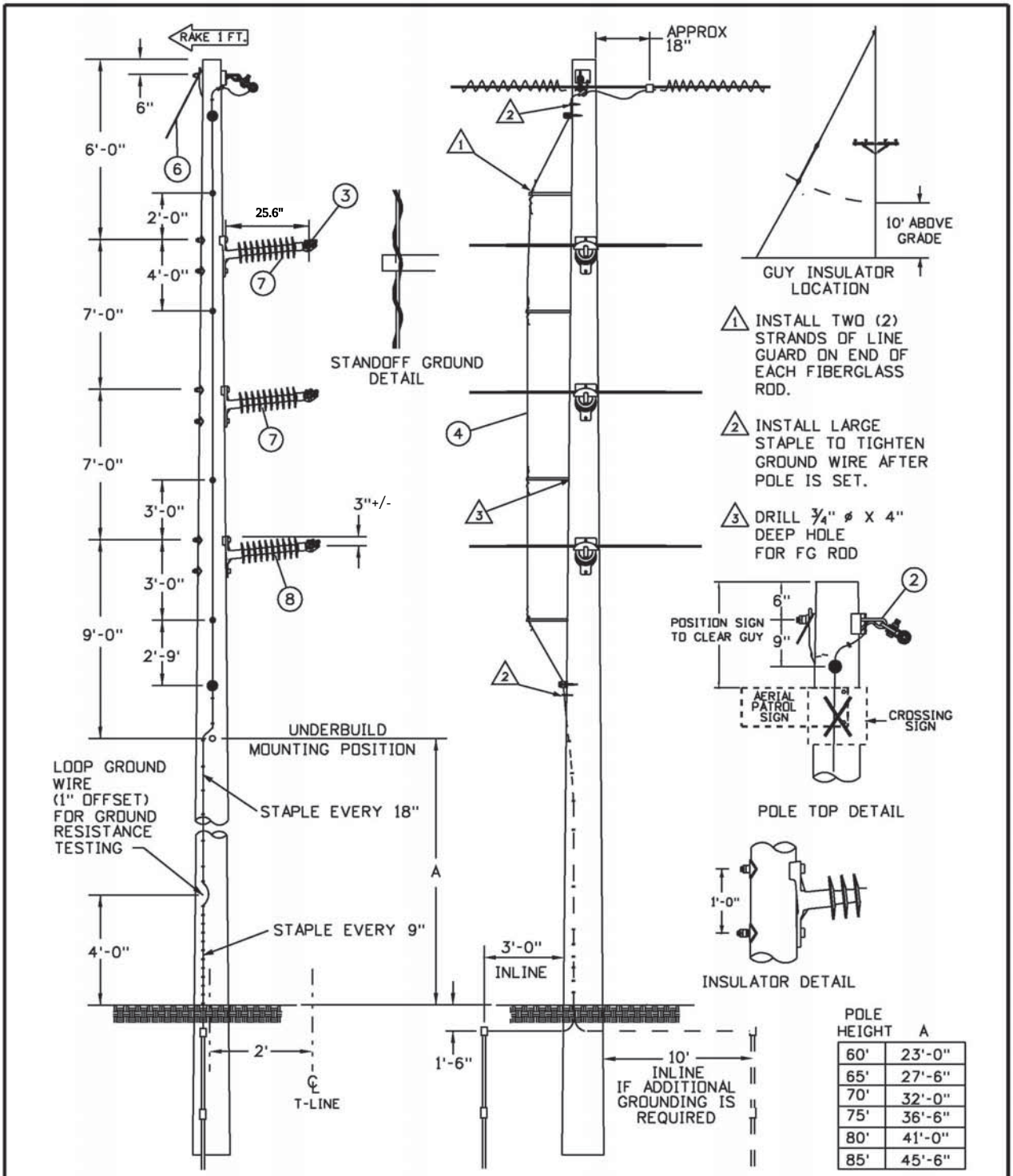

POLE HEIGHT	A
60'	23'-0"
65'	27'-6"
70'	32'-0"
75'	36'-6"
80'	41'-0"
85'	45'-6"

CONFIDENTIAL
These documents are for the use of ITC Holdings Corp. ITC Holdings Corp. disclaims all warranties, both expressed and implied. Use by anyone other than ITC Holdings Corp. is at their own risk.

ITC Midwest

NO.	DATE	REVISION	BY	CHK'D	APV'D
3	10-17-08	CHANGE TO ITC BORDER	RAH		
2	11-10-05	GROUNDING CHANGES	RT		
1	02-13-04	STANDARD CHANGES	SDL		DO
0	09-01-99	ORIGINAL ISSUE	SJK		

69KV SMALL ANGLE 1-5 DEG. W/ HPI & STANDOFF GROUND

Scale: NONE | DWG. NO. 69ASGP1

RECEIVED
February 13, 2013

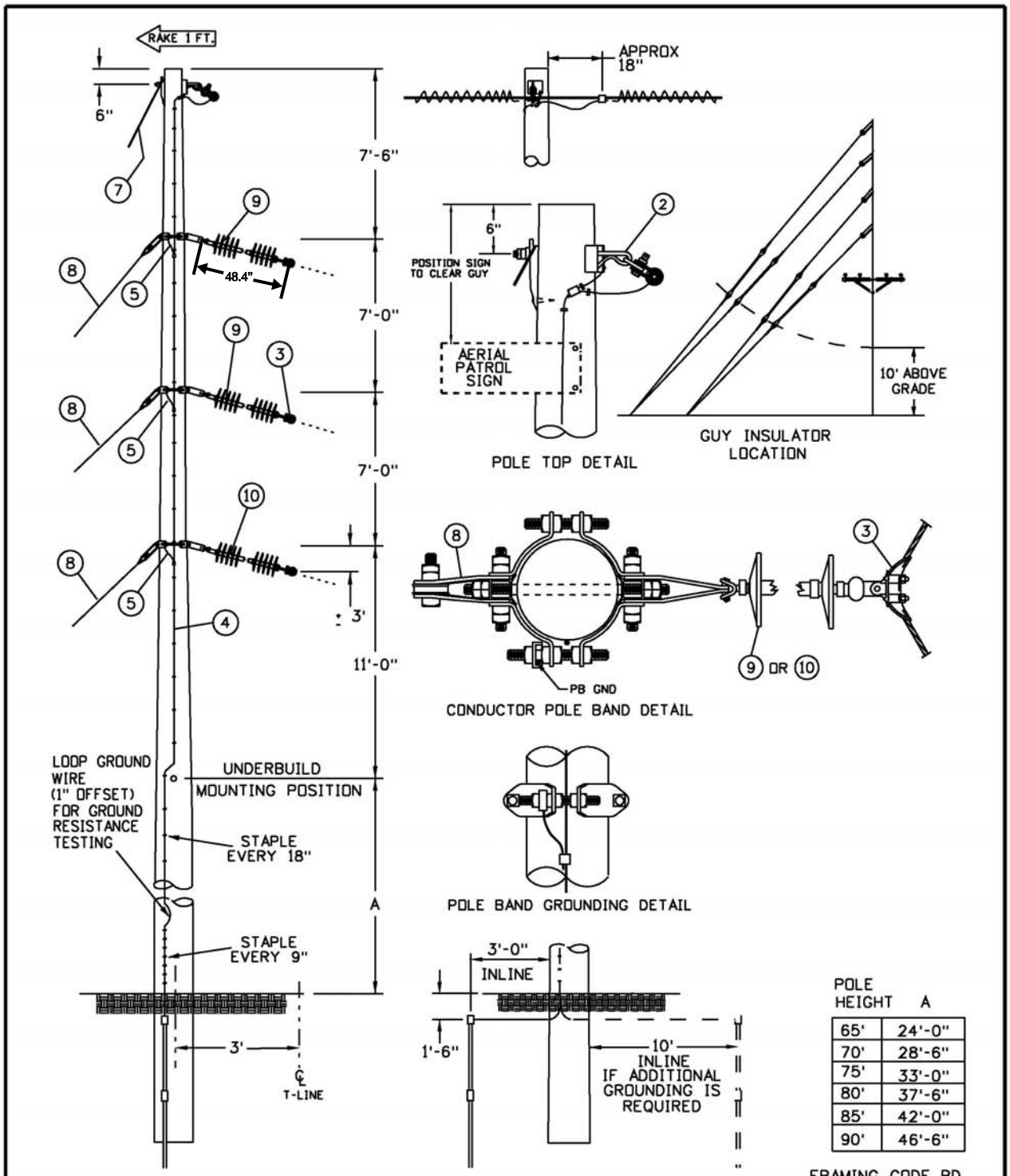

POLE HEIGHT	A
65'	24'-0"
70'	28'-6"
75'	33'-0"
80'	37'-6"
85'	42'-0"
90'	46'-6"

FRAMING CODE BD

CONFIDENTIAL
These documents are for the use of ITC Holdings Corp. ITC Holdings Corp. disclaims all warranties, both expressed and implied. Use by anyone other than ITC Holdings Corp. is at their own risk.

ITC Midwest

NO.	DATE	REVISION	BY	CHK'D	APV'D
3	10-17-08	CHANGE TO ITC BORDER	RAH		
2	11-10-05	GROUNDING CHANGES	RT		
1	02-13-04	STANDARD CHANGES	RT		DO
0	09-01-99	ORIGINAL ISSUE	SJK		

69KV LARGE ANGLE 20-45 DEG.
W/ 25K LB. INS & EYEBOLTS

Scale: NONE | DWG. NO. 69ALV3

RECEIVED
February 13, 2013
E-20994
(Amendment No. 15)

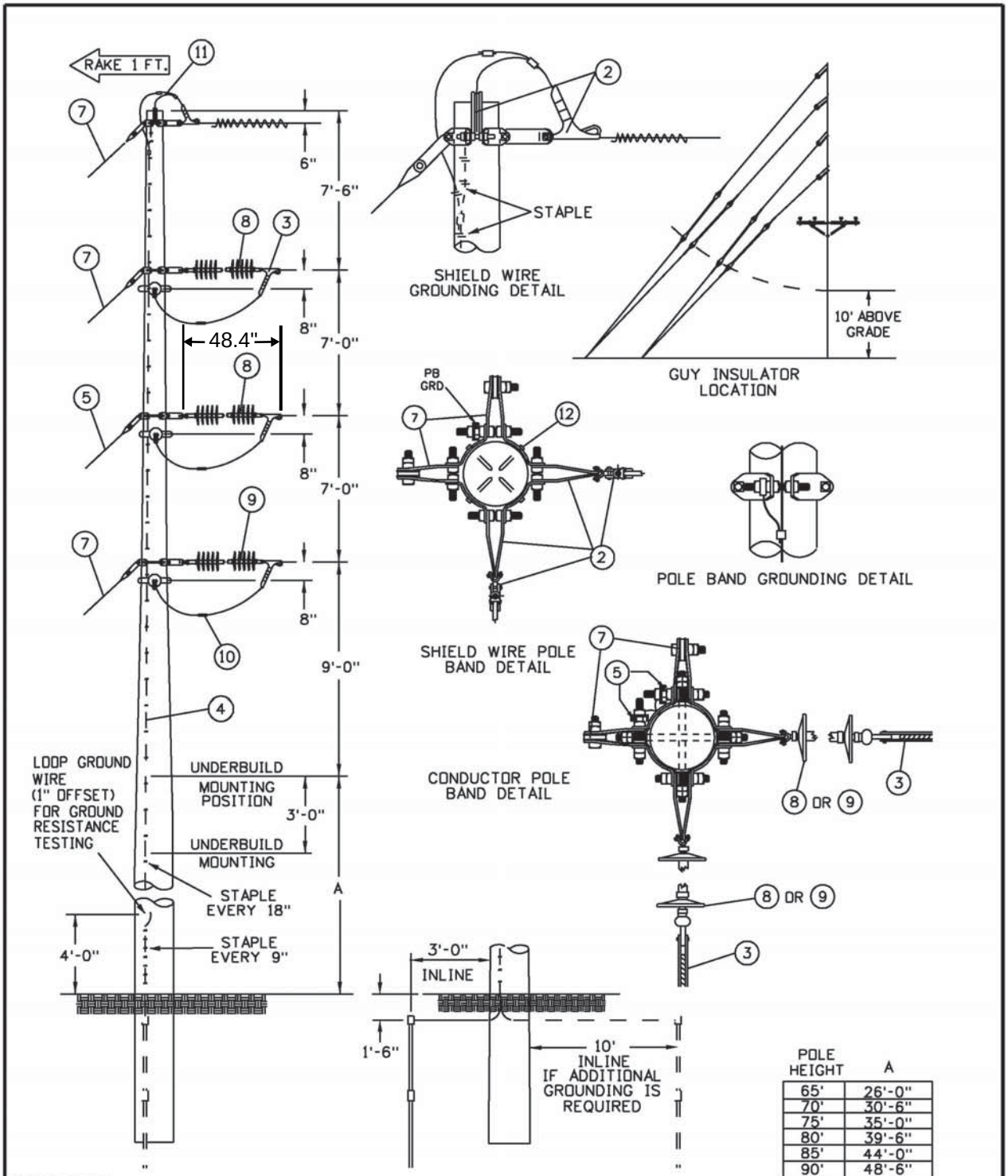

CONFIDENTIAL
These documents are for the use of ITC Holdings Corp. ITC Holdings Corp. disclaims all warranties, both expressed and implied. Use by anyone other than ITC Holdings Corp. is at their own risk.

NO.	DATE	REVISION	BY	CHK'D	APV'D
3	10-17-08	CHANGE TO ITC BORDER	RAH		
2	11-10-05	GROUNDING CHANGES	RT		
1	02-13-04	STANDARD CHANGES	SDL		DD
0	09-01-99	ORIGINAL ISSUE	SJK		

ITC

69KV 2-WAY DEADEND
W/ 25K LB INS. & POLEBANDS

Scale: NONE | DWG. NO. 69D2V3

RECEIVED
February 13, 2013

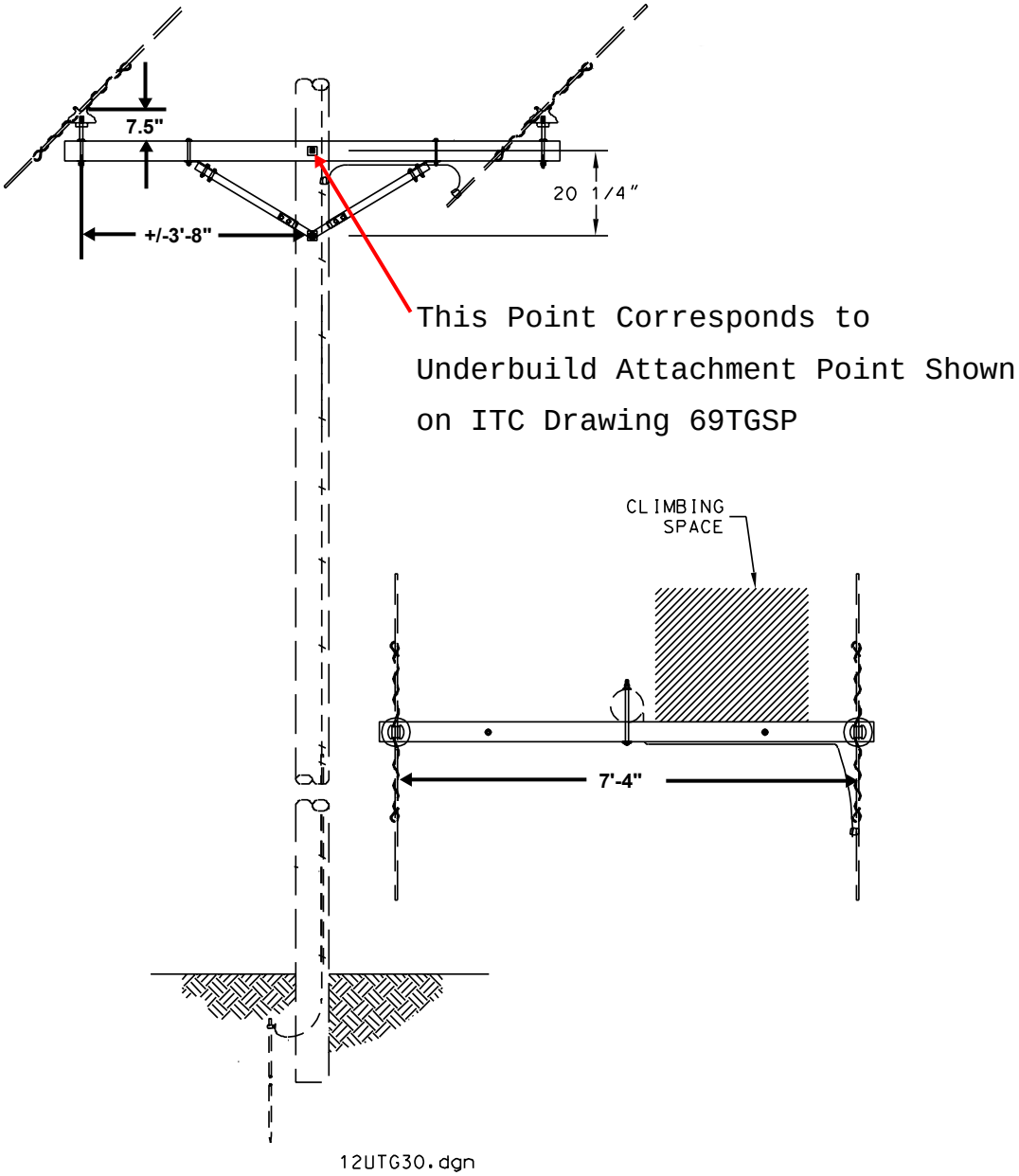

RECEIVED
February 13, 2013

E-20994
(Amendment No. 15)

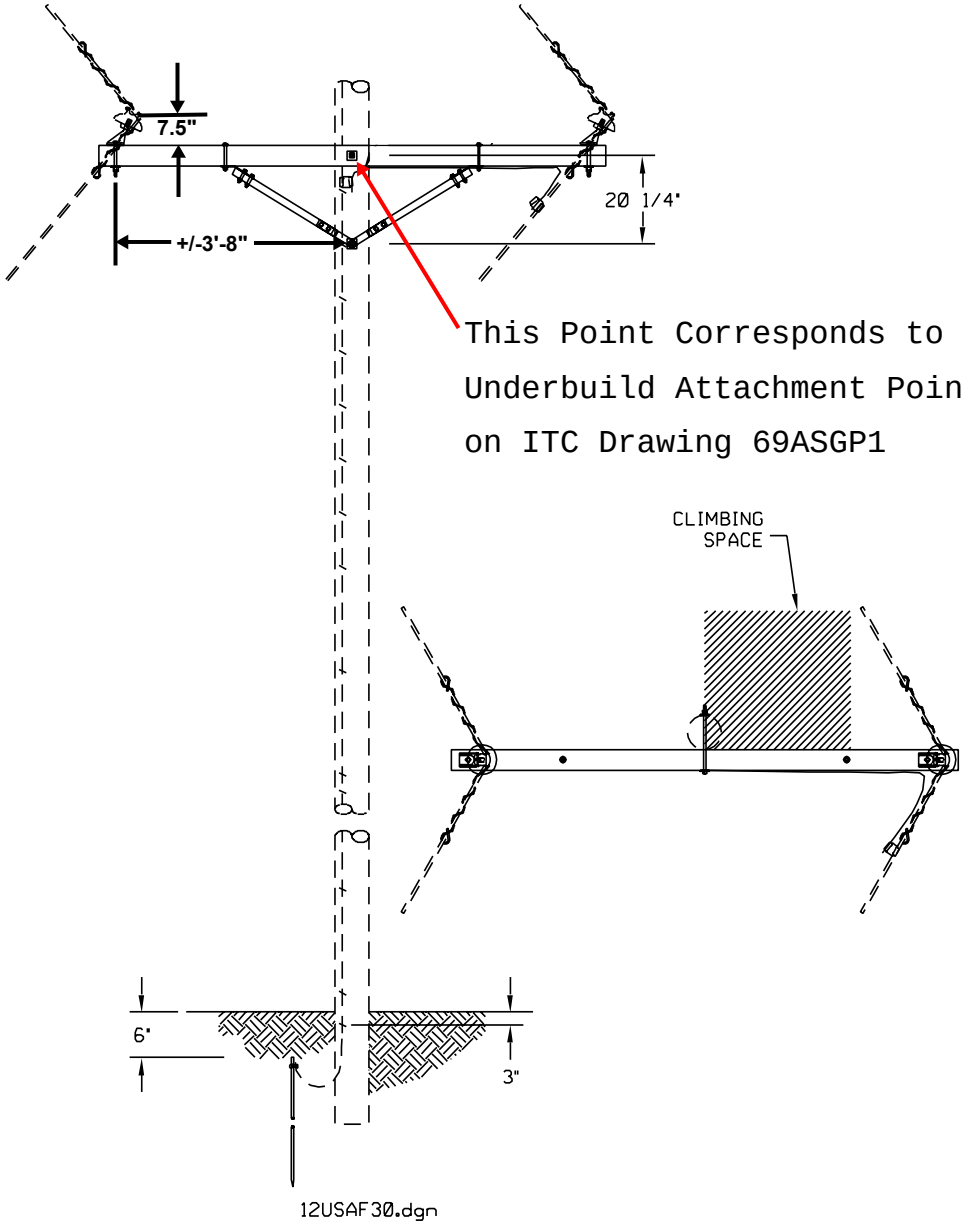

RECEIVED
February 13, 2013

E-20994
(Amendment No. 15)

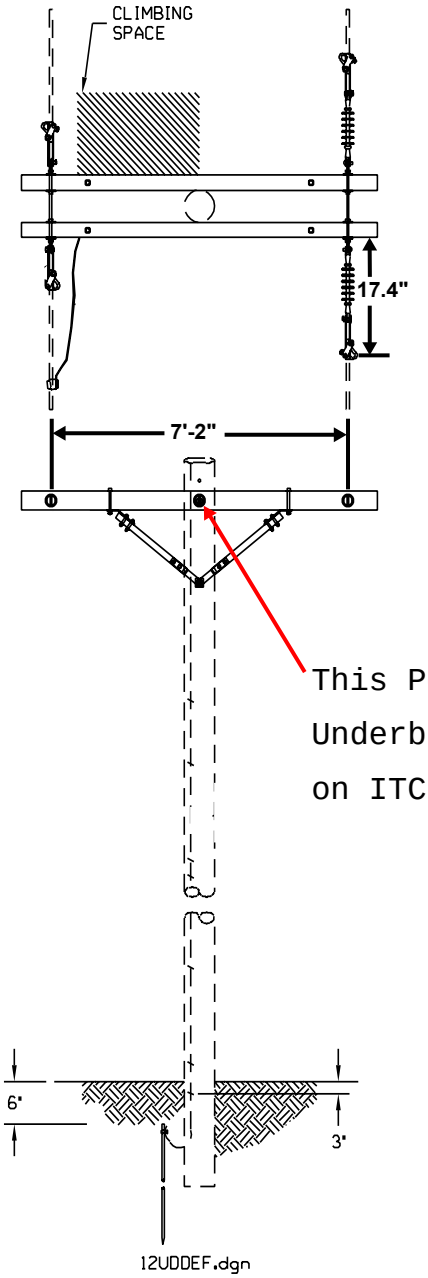

This Point Corresponds to Underbuild Attachment Point Shown on ITC Drawing 69D2V3

RECEIVED
February 13, 2013

E-20994
(Amendment No. 15)