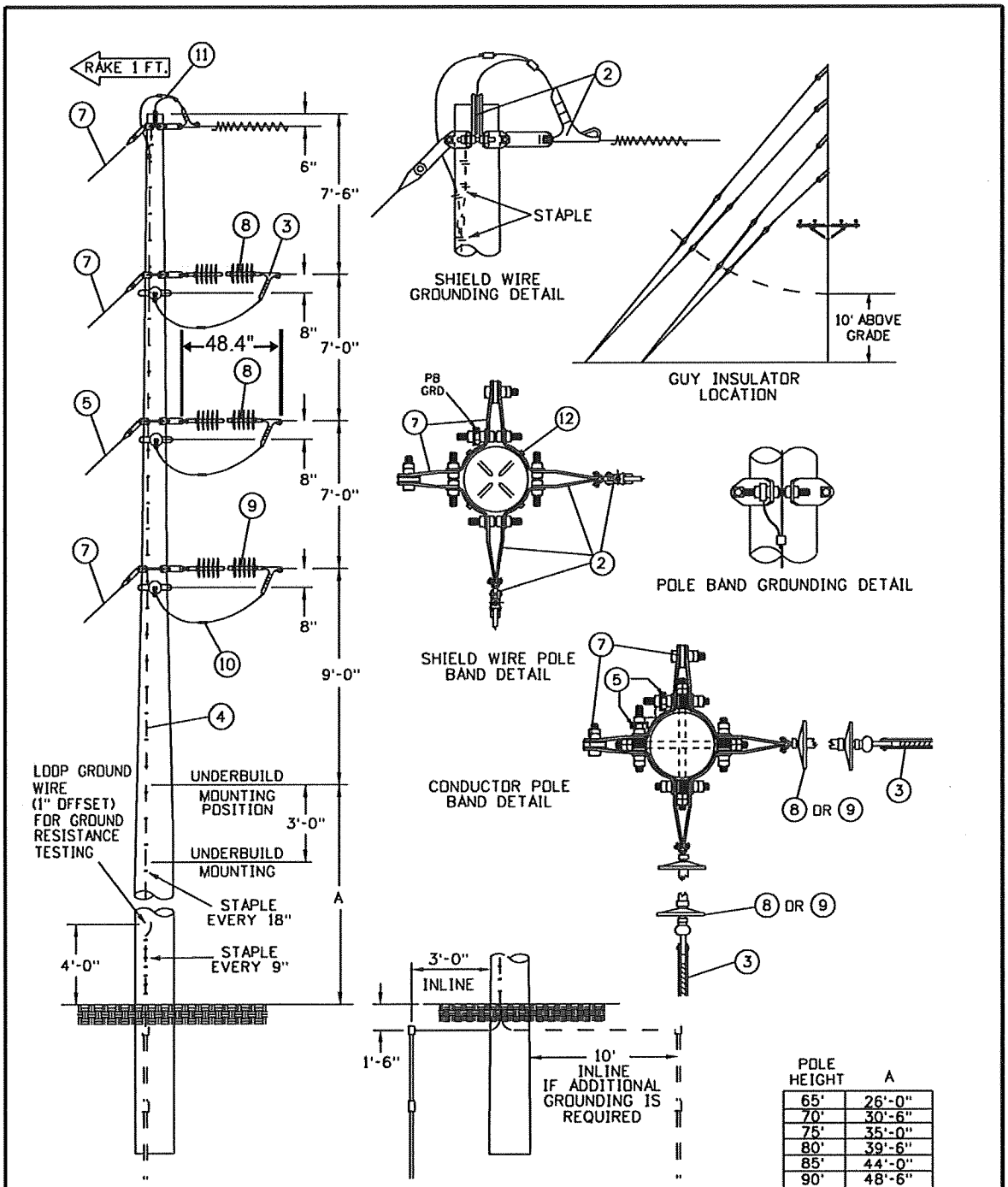

POLE HEIGHT	A
65'	26'-0"
70'	30'-6"
75'	35'-0"
80'	39'-6"
85'	44'-0"
90'	48'-6"

FRAMING CODE BD

ITC Midwest

CONFIDENTIAL
These documents are for the use of ITC Holdings Corp. ITC Holdings Corp. disclaims all warranties, both expressed and implied. Use by anyone other than ITC Holdings Corp. is at their own risk.

NO.	DATE	REVISION	BY	CHK'D	APV'D
3	10-17-08	CHANGE TO ITC BORDER	RAH		
2	11-10-05	GROUNDING CHANGES	RT		
1	02-13-04	STANDARD CHANGES	SDL		DO
0	09-01-99	ORIGINAL ISSUE	SJK		

ITC

69KV 2-WAY DEADEND
W/ 25K LB INS. & POLEBANDS

Scale: NONE | DWG. NO. 69D2V3

RECEIVED
February 6, 2013

E-20994
(Amendment No. 11)