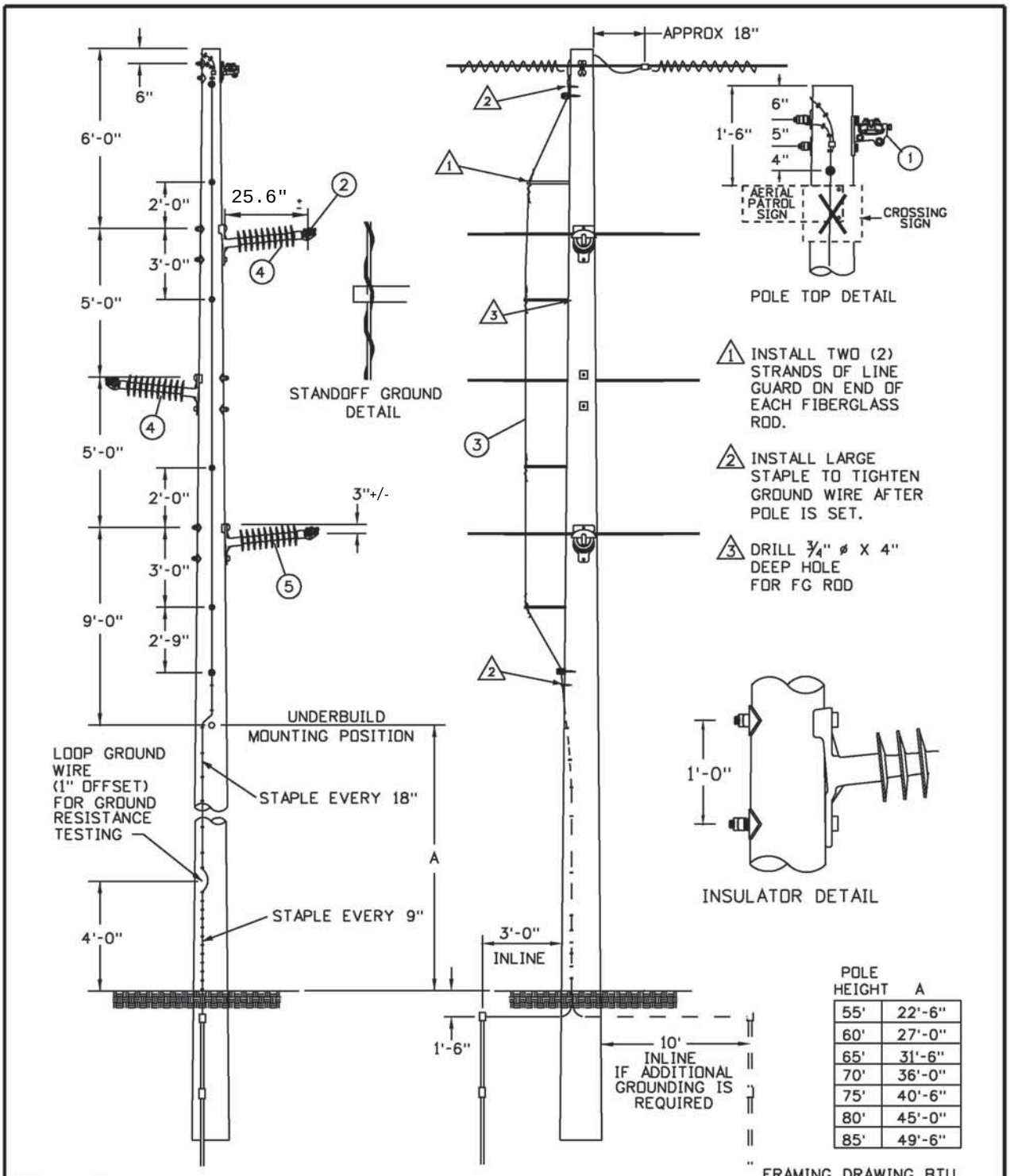

POLE HEIGHT	A
55'	22'-6"
60'	27'-0"
65'	31'-6"
70'	36'-0"
75'	40'-6"
80'	45'-0"
85'	49'-6"

CONFIDENTIAL
These documents are for the use of ITC Holdings Corp. ITC Holdings Corp. disclaims all warranties, both expressed and implied. Use by anyone other than ITC Holdings Corp. is at their own risk.

ITC Midwest

NO.	DATE	REVISION	BY	CHK'D	APV'D
3	10-17-08	CHANGE TO ITC BORDER	RAH		
2	11-10-05	GROUNDING CHANGES	RT		
1	02-13-04	STANDARD CHANGES	SDL		DD
0	09-01-99	ORIGINAL ISSUE	SJK		

69KV TANGENT W/ HPI & STANDOFF GND

Scale: NONE

DWG. NO. 69TGSP

RECEIVED
March 12, 2013

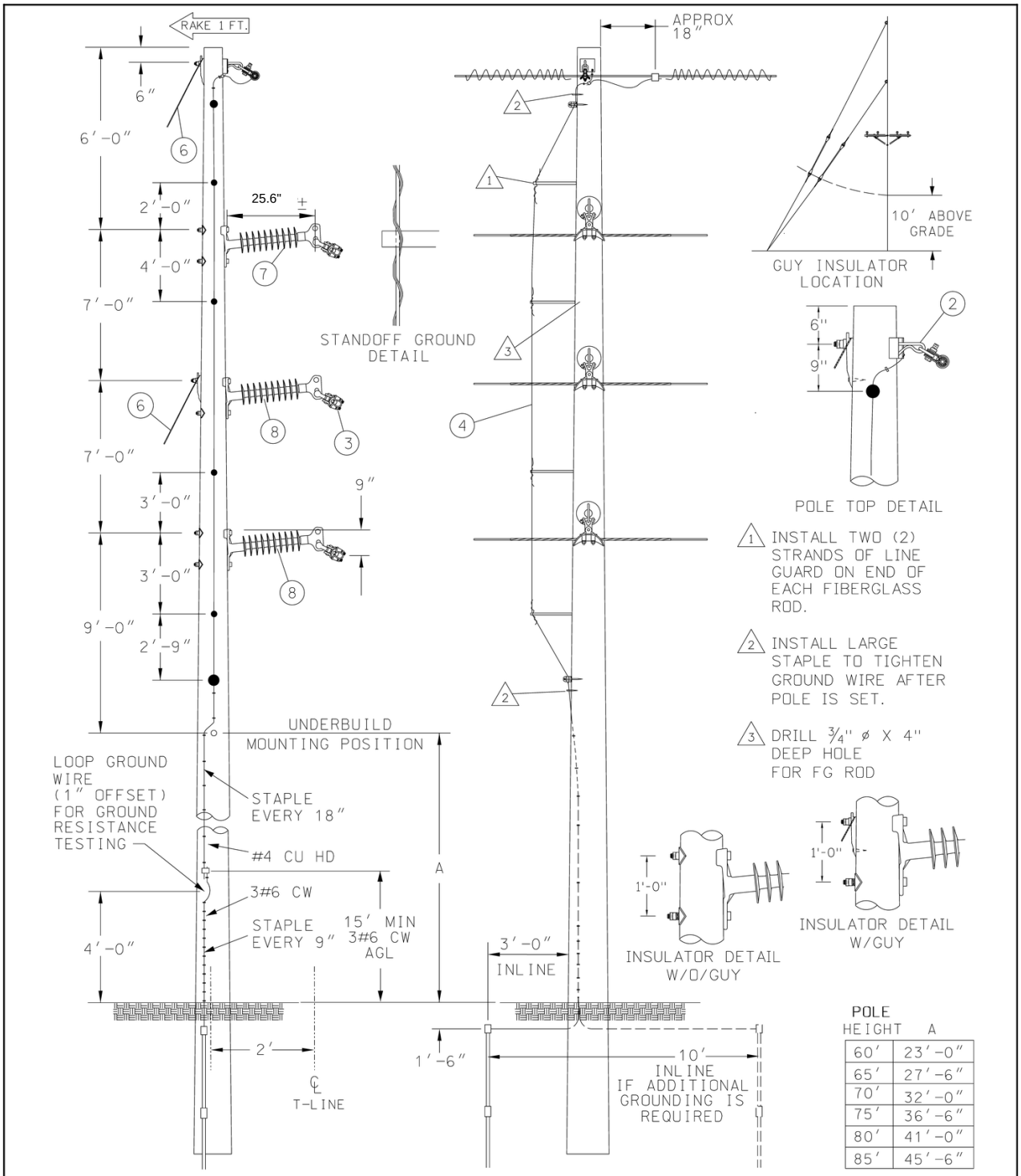

CONFIDENTIAL
These documents are for the use of ITC Holdings Corp. ITC Holdings Corp. disclaims all warranties, both expressed and implied. Use by anyone other than ITC Holdings Corp. is at their own risk.

ITC Midwest

NO.	DATE	REVISION	BY	CHK'D	APV'D
4	06-15-2012	REMOVE OLD STRUCT NUMBER SIGN	ITC-RAH		ITC-RAH
3	10-17-2008	CHANGE TO ITC BORDER	RAH		
2	11-10-2005	GROUNDING CHANGES	RT		
1	02-13-2004	STANDARD CHANGES	SDL		DD
0	09-01-1999	ORIGINAL ISSUE	SJK		

69KV MEDIUM ANGLE 10-20 DEG.
W/2 HOLE HPI
& STANDOFF GROUND

Scale: NONE | DWG. NO. 69AMGP

RECEIVED
March 12, 2013

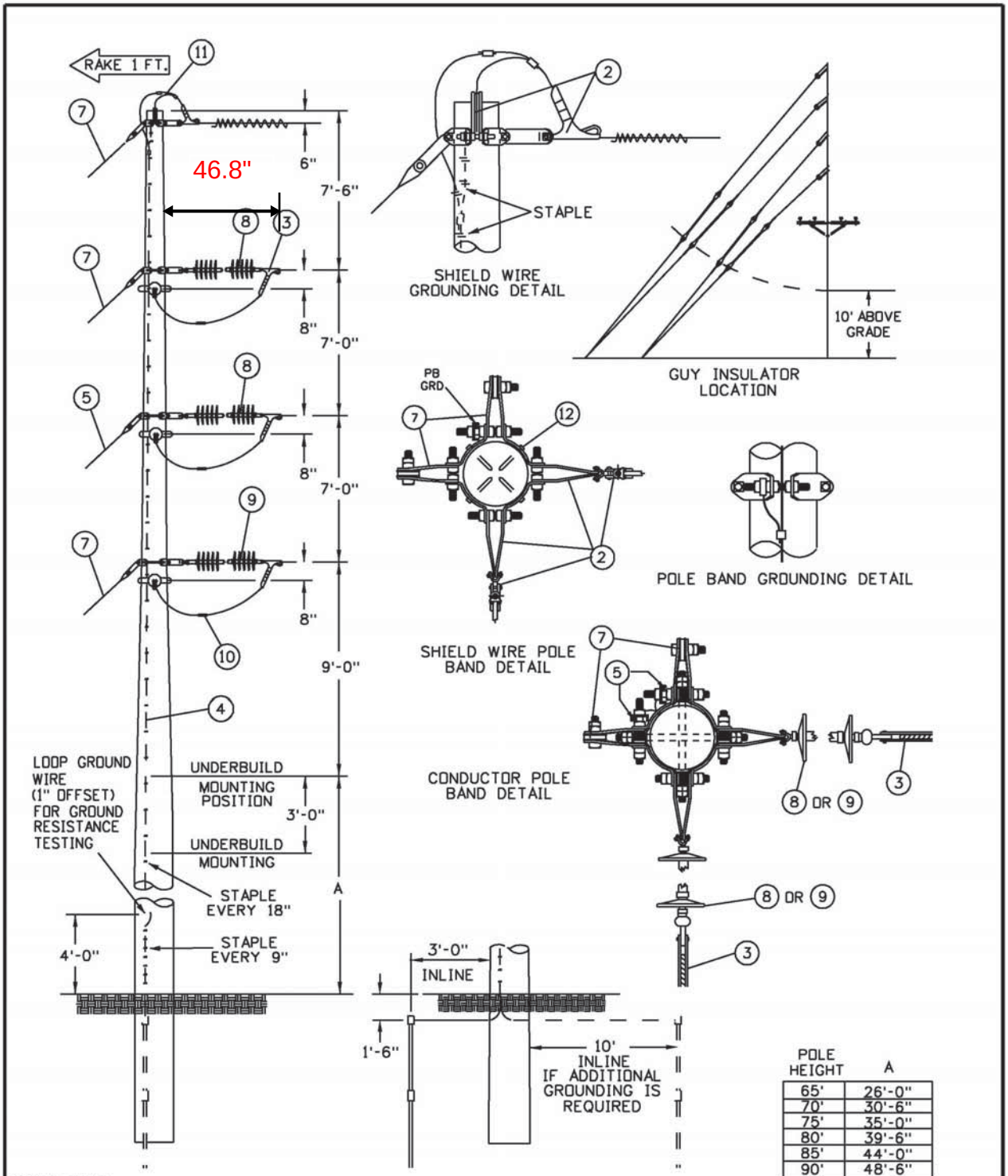

POLE HEIGHT	A
65'	26'-0"
70'	30'-6"
75'	35'-0"
80'	39'-6"
85'	44'-0"
90'	48'-6"

FRAMING CODE BD

CONFIDENTIAL
These documents are for the use of ITC Holdings Corp. ITC Holdings Corp. disclaims all warranties, both expressed and implied. Use by anyone other than ITC Holdings Corp. is at their own risk.

ITC Midwest

NO.	DATE	REVISION	BY	CHK'D	APV'D
3	10-17-08	CHANGE TO ITC BORDER	RAH		
2	11-10-05	GROUNDING CHANGES	RT		
1	02-13-04	STANDARD CHANGES	SDL		DD
0	09-01-99	ORIGINAL ISSUE	SJK		

69KV 2-WAY DEADEND
W/ 25K LB INS. & POLEBANDS

Scale: NONE | DWG. NO. 69D2V3

RECEIVED
March 12, 2013

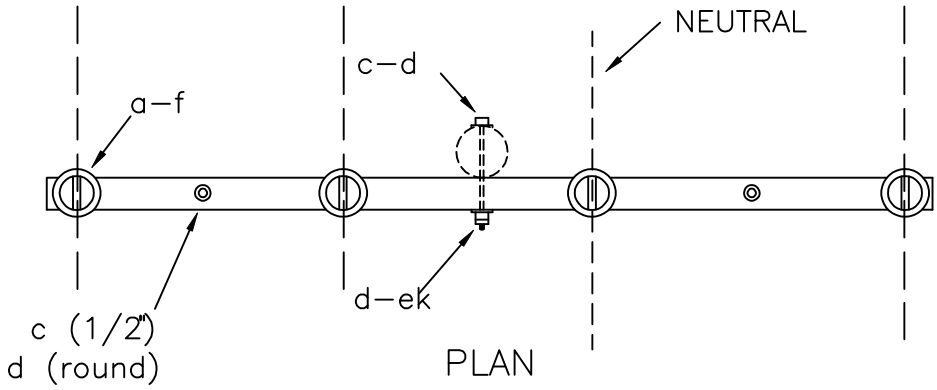

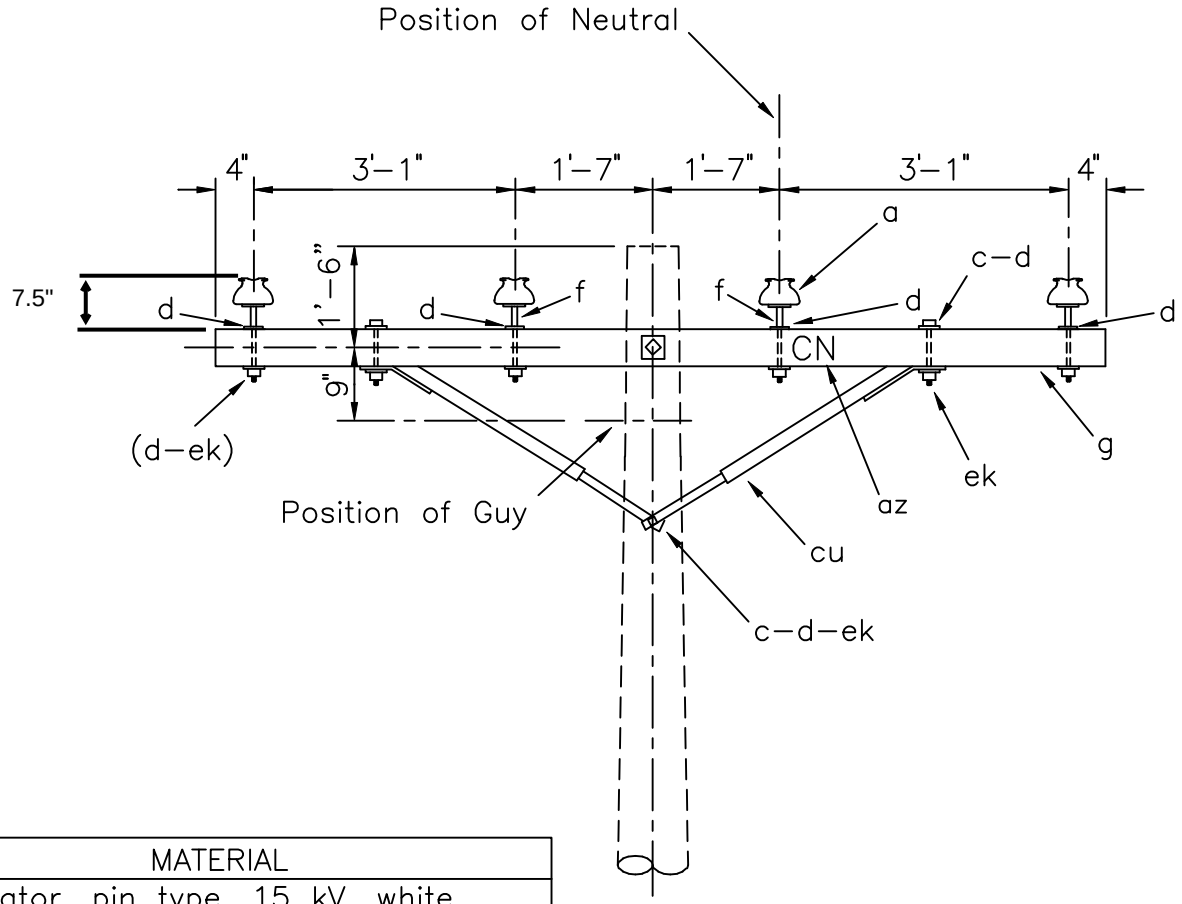

ITEM	QTY	MATERIAL
a	1	Insulator, pin type, 15 kV, white
a	3	Insulator, pin type (12.47/7.2 kV)
c	2	Bolt, machine, 1/2" x req'd length
c	2	Bolt, machine, 5/8" x req'd length
d	2	Washer, round, 1 3/8"
d	7	Washer, square, 2 1/4"
f	4	Pin, crossarm, steel, 5/8" x 10 3/4"
g	1	Crossarm, 3 5/8" x 4 5/8" x 10'–0"
az	4	Letters, 2" C, 2" N, with 1" nails
cu	1	Brace, wood, 60" span
ek	4	Locknuts

NOTE: Install either identification letters (az) or white insulator in neutral position.

RECEIVED
March 12, 2013

E-20994
(Amendment No. 12)

DESIGN PARAMETERS:

See TABLE II

SINGLE SUPPORT, NEUTRAL ON CROSSARM

APRIL 2005	3 – PHASE PRIMARY 12.47/7.2 kV	C1.41 (C9–1)
RUS		

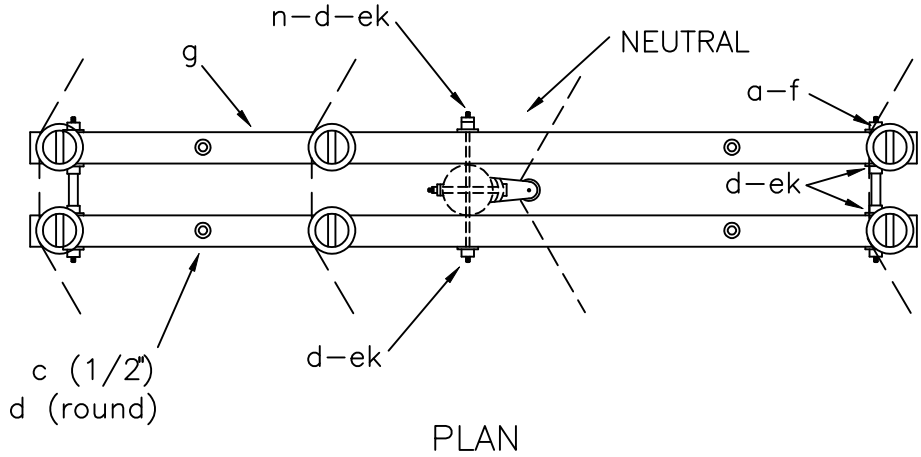

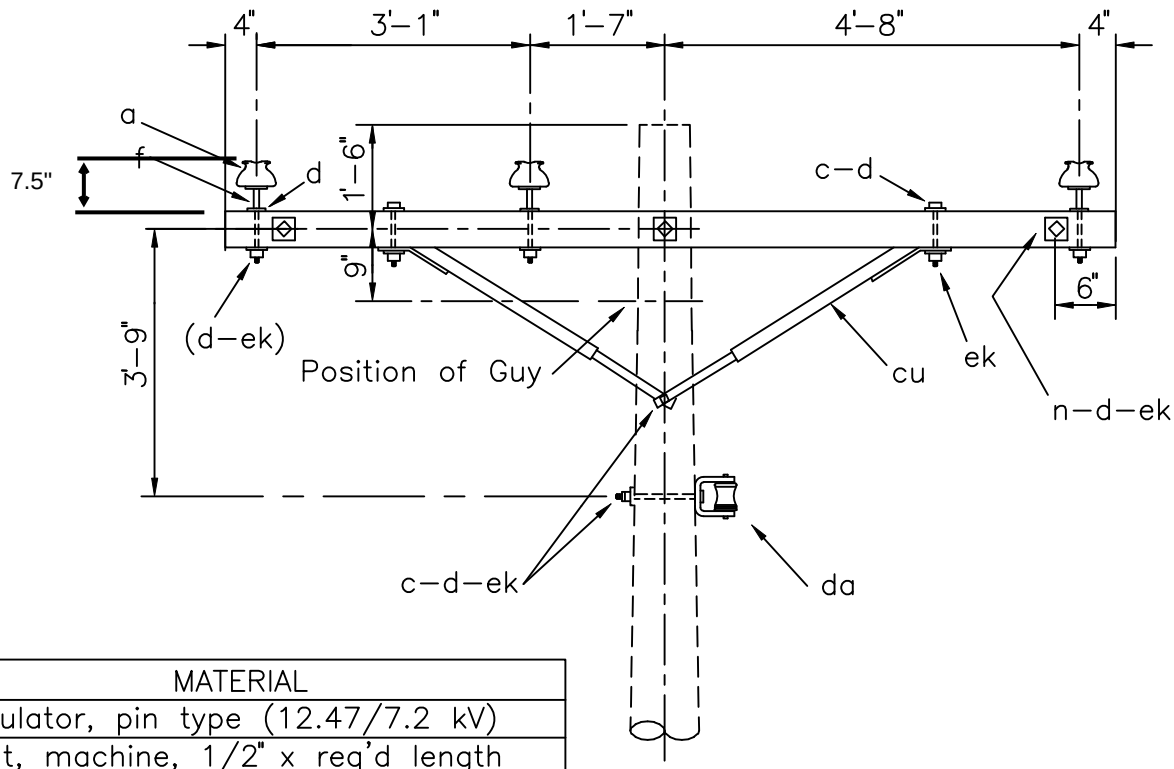

ITEM	QTY	MATERIAL
a	6	Insulator, pin type (12.47/7.2 kV)
c	4	Bolt, machine, 1/2" x req'd length
c	2	Bolt, machine, 5/8" x req'd length
d	4	Washer, round, 1 3/8"
d	18	Washer, square, 2 1/4"
f	6	Pin, crossarm, steel, 5/8" X 10 3/4"
g	2	Crossarm, 3 5/8" x 4 5/8" x 10'–0"
n	3	Bolt, double arm, 5/8" x req'd length
cu	2	Brace, wood, 60" span
da	1	Bracket, insulated
ek	16	Locknuts

RECEIVED
March 12, 2013

E-20994
(Amendment No. 12)

NOTE:
Neutral assembly may be installed on opposite side of pole when necessary to increase midspan conductor clearance.

DESIGN PARAMETERS:

See TABLE IV

DOUBLE SUPPORT ON 10 FOOT CROSSARMS

APRIL 2005	3 – PHASE PRIMARY	C2.52
RUS	12.47/7.2 kV	(C2–1)

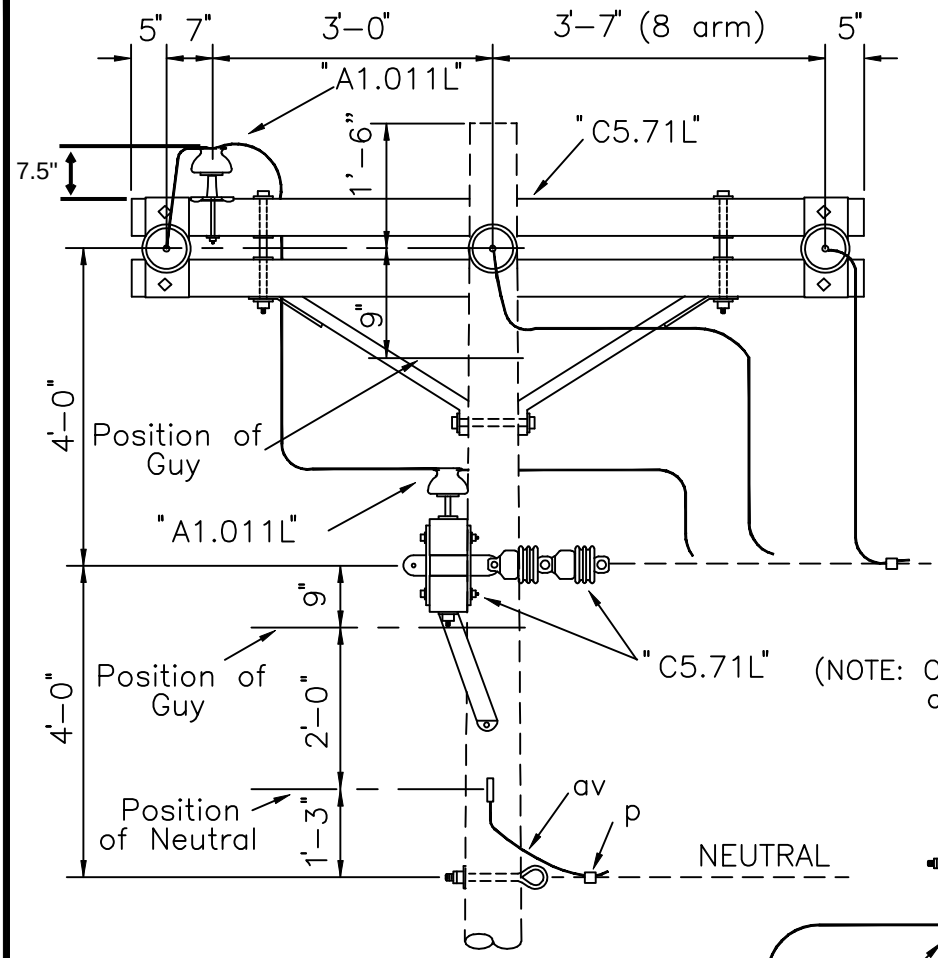

(NOTE: Other double or triple crossarm assemblies may be used.)

PLAN

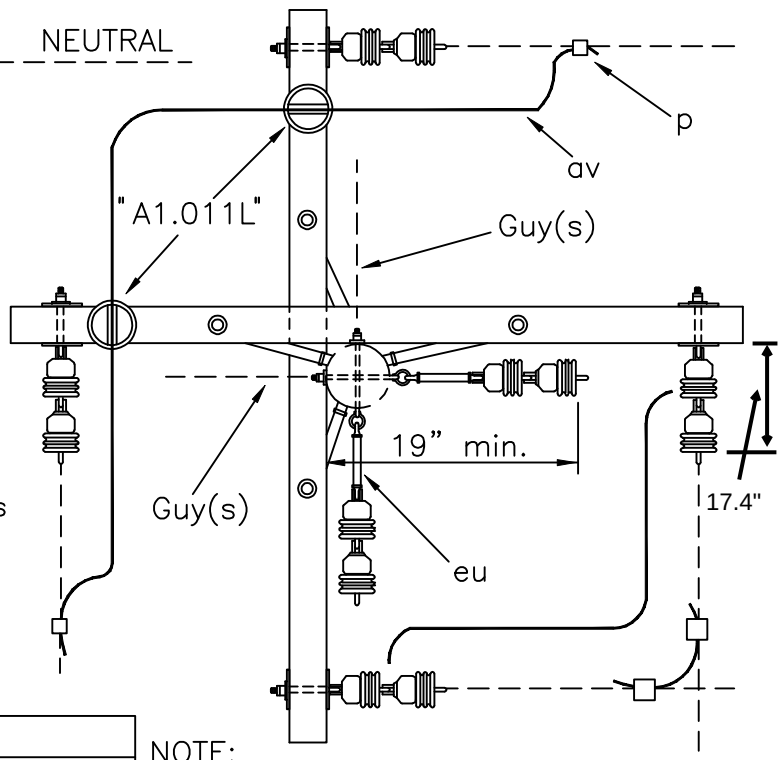

NOTE: Guy angle of top down guy needs to be less than 39° (4:5 guy lead to height ratio). A 1:1 guy ratio is permitted if 10 foot crossarm assembly is used in bottom position. Install guy strain insulator, "w" 60" minimum, in top down guy. (See "E1.5")

ITEM	QTY	MATERIAL
	2	C5.71L Primary (Crossarm) Assembly
	2	A1.011L Misc. Single Support
p		Connectors, as req'd
av		Jumpers, as req'd
eu	2	Link, extension, insulated, 12" min.

NOTE:
Vertical deadends, Dwg. "C4.1," is preferred construction.

RECEIVED
March 12, 2013

DESIGN PARAMETERS:

PERMITTED LONGITUDINAL LOAD EQUALS LESSER OF: 5,000 lbs./Conductor, or Manufacturer's specifications times NESC strength factor.

E-20994
(Amendment No. 12)

DOUBLE DEADENDS (BUCKARMS) GUIDE

APRIL 2005	3 – PHASE PRIMARY 12.47/7.2 kV	C6.91G
RUS		